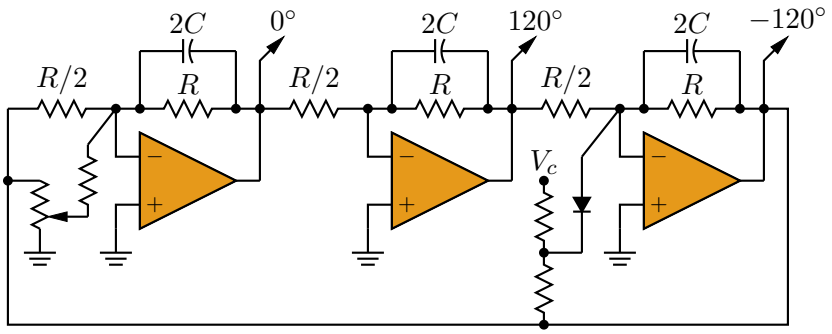
2C
0°
2C
120°
2C
−120°
R/2
R
R/2
R
R/2
R
V_c